WIRING DIAGRAM
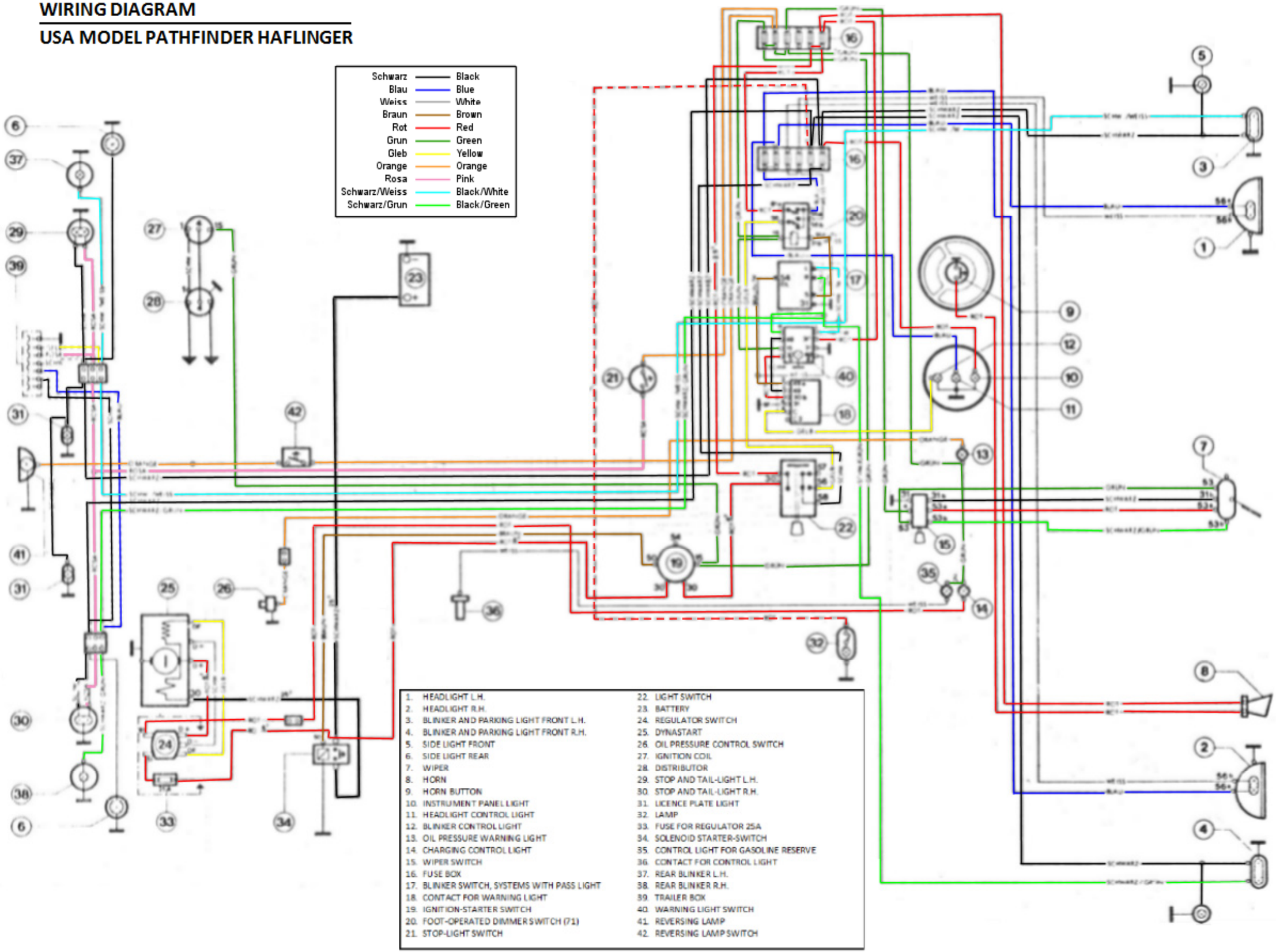
USA MODEL PATHFINDER HAFLINGER